ACHIEVING ELECTRICAL ENERGY SAVINGS DURING TRANSIENT PROCESSES IN INDUCTION MOTOR DRIVES OF LOOMS AT TEXTILE ENTERPRISES

N. B. Pirmatov[1], A. T. Panoev[2], N. M. Karimova[3]
[1]*Tashkent State Technical University*
[2]*Bukhara State Technical University*
[3]*Bukhara State Technical University*

At present, textile enterprises in our republic are undergoing continuous improvement. The textile industry itself comprises a complex and diverse range of branches, one of the largest of which is cotton fabric production. Alongside cotton fibre, the production of man-made fibres is also developing in the Republic of Uzbekistan. This makes it possible to further expand the raw material base of the textile industry in our independent republic and increase the range of manufactured products. For example, current surges occur during the operation of electric motors in looms and spinning machines at textile enterprises; this current is referred to as the starting current or locked-rotor current [2]. The starting current is 5–7 times the rated current and acts for a short period. Once the motor has accelerated, its current decreases to a minimum value [6]. Various starting methods are used to reduce the starting current in accordance with applicable standards and regulations. At the same time, measures must be taken to stabilise the supply voltage. One such method is to control looms using a frequency converter. A frequency converter is used to start and control the loom; it is installed between the circuit breaker and the motor and controls the motor's rotational speed, thereby providing additional electrical energy savings [5]. Various starting methods are used to reduce the starting current in accordance with applicable standards and regulations [2]. At the same time, measures must be taken to stabilise the supply voltage. One such method is to control the speed of loom induction motors using a frequency converter [4].

ACADEMIC SCIENCE PUBLISHING

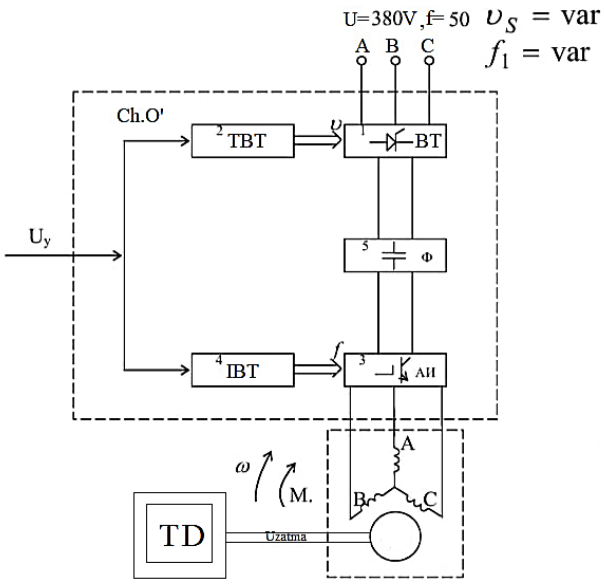

Figure 1. Closed-loop functional diagram for frequency control of induction motors in textile enterprise looms [5].

TBT, rectifier control system; IBT, inverter control system;
BT, controlled rectifier; ChO', frequency converter; TD, loom;
Uzatma, mechanical transmission; Ф, filter; АИ, autonomous inverter.

A circuit breaker is connected to the supply network at U = 380 V, and a frequency converter installed between the circuit breaker and the motor controls the rotational speed of the loom motor. During starting, the motor accelerates smoothly, preventing yarn breakage. In addition, electrical energy is saved during starting. Thus, this control method automatically regulates warp tension and weaving speed, ensuring an efficient weaving process and electrical energy savings [3].

The purpose is to start and control loom induction motors using a frequency converter installed between the circuit breaker and the induction motor. The converter controls the motor's rotational speed and provides additional electrical energy savings [6]. In addition to saving electrical energy during steady-state operation, induction motor drives with frequency-controlled speed can also use electrical energy efficiently during dynamic operation [1]. The dynamic operating modes of an induction motor drive include starting, speed regulation, braking and other modes [3]. When an induction motor is started directly from the mains without controlling the supply voltage, the starting current is 5–7 times the rated stator current, resulting in increased electrical energy losses in the stator winding. If the moments of inertia of the induction motor and the driven machinery are large, the transient process is prolonged [4]. Consequently, the stator winding insulation may heat up beyond its permissible temperature and fail. Therefore, when starting an induction motor with frequency-controlled speed, varying the frequency according to a specified law prevents excessive stator current and allows the motor to start

ACADEMIC SCIENCE PUBLISHING

under normal thermal conditions [4]. It is known that direct-on-line starting of induction motors produces large electromagnetic torques and currents. Large-amplitude oscillations of electromagnetic torque can cause dangerous dynamic loads in the stator winding and mechanical stresses in the kinematic chain of the electric drive [5]. Ensuring smooth starting and stopping, and thus preventing large dynamic stresses, extends the service life of the induction motor. In addition, smooth starting and stopping of high-power induction motors eliminate the effect of high-amplitude electrical loads on the supply network, which in turn benefits other consumers connected to the network [6]. As an example, a phase-voltage oscillogram was recorded under no-load conditions during direct-on-line starting of an induction motor used in looms and spinning machines at a textile enterprise (Figure 2). The oscillogram of the induction motor operating under no-load conditions is shown below. It can be seen that the phase voltage varies sinusoidally in this operating mode.

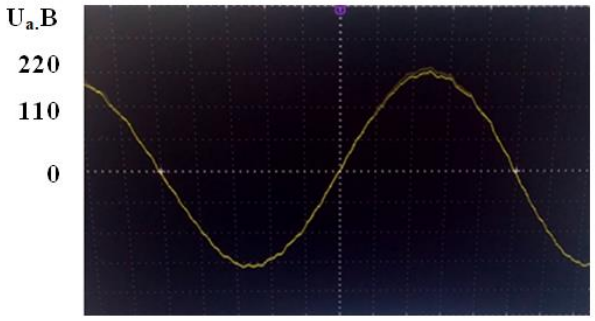

Figure 2. Phase-voltage oscillogram of an induction motor operating under no-load conditions. Phase voltage U_a is expressed in volts (V).

The next graph shows an oscillogram recorded during experimental studies of induction motors with the same voltage and power ratings, but operating under load. It can be seen that the phase-voltage waveform is distorted relative to a sinusoid because higher-order harmonics appear (Figure 3).

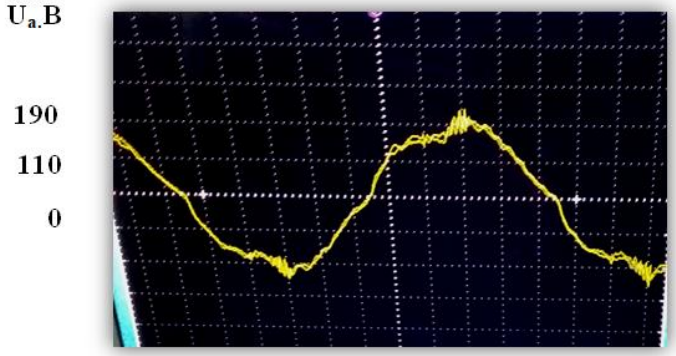

Figure 3. Phase-voltage oscillogram during starting of an induction motor with the loom connected. Phase voltage U_a is expressed in volts (V).

The next oscillogram (Figure 4) shows the phase voltage of the loom induction motor, with the same voltage and power ratings, operating under load with a frequency converter connected.

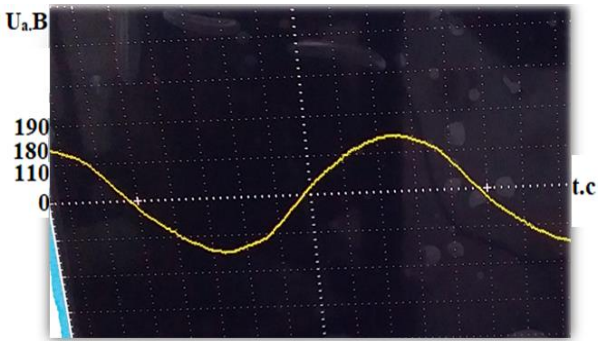

Figure 4. Phase-voltage oscillogram of an induction motor operating under load with a frequency converter connected. Phase voltage U_a is expressed in volts (V), and time t in seconds (s).

It can be seen from the graph that the higher-order harmonics have disappeared and that the phase-voltage waveform is close to sinusoidal. This indicates a reduction in energy consumption.

In conclusion, optimal control of the dynamic operating modes of induction motors used at textile enterprises, namely starting, speed regulation and braking, has been achieved. Frequency control has made it possible to save electrical energy, regulate induction motor speed, improve electric drive efficiency through smooth starting and stopping, and reduce induction motor power losses [5].

References

1. Baratov R., Pirmatov N., Panoev A., Chulliyev Ya., Ruziyev S. and Mustafoqulov A. Achievement of electric energy savings through controlling frequency convertor in the operation process of asynchronous motors in textile enterprises. IPICSE 2020. IOP Conference Series: Materials Science and Engineering, 1030 (2021), 012161. IOP Publishing. doi:10.1088/1757-899X/1030/1/012161.

2. Imomnazarov A. T. Fundamentals of induction motor operation in the minimum power loss mode. Bulletin of Tashkent State Technical University. Tashkent, 2005, No. 2, pp. 33–38.

3. Hoshimov O. O., Imomnazarov A. T. Energy Saving in Electromechanical Systems. Tashkent: O'AJBNT Centre, 2004. 96 p.

4. Pirmatov N. B., Axmatov M. G., Kamalov N. K. Investigation of the operation of a synchronous motor with excitation along the longitudinal and transverse axes under shock load. Electricity, 2003, No. 2, pp. 64–65.

5. Pirmatov N., Panoev A. Frequency control of asynchronous motors of looms of textile enterprises. E3S Web of Conferences, 2020, 216, 01120.

6. Baratov R., Pirmatov N. Low-Speed generator with permanent magnets and additional windings in the rotor for small power wind plants and micro hydro power plants. IOP Conference Series: Materials Science and Engineering, 2020, 883(1), 012183.

ACADEMIC SCIENCE PUBLISHING